Skyline System 3 with bottom "Quick Connect"

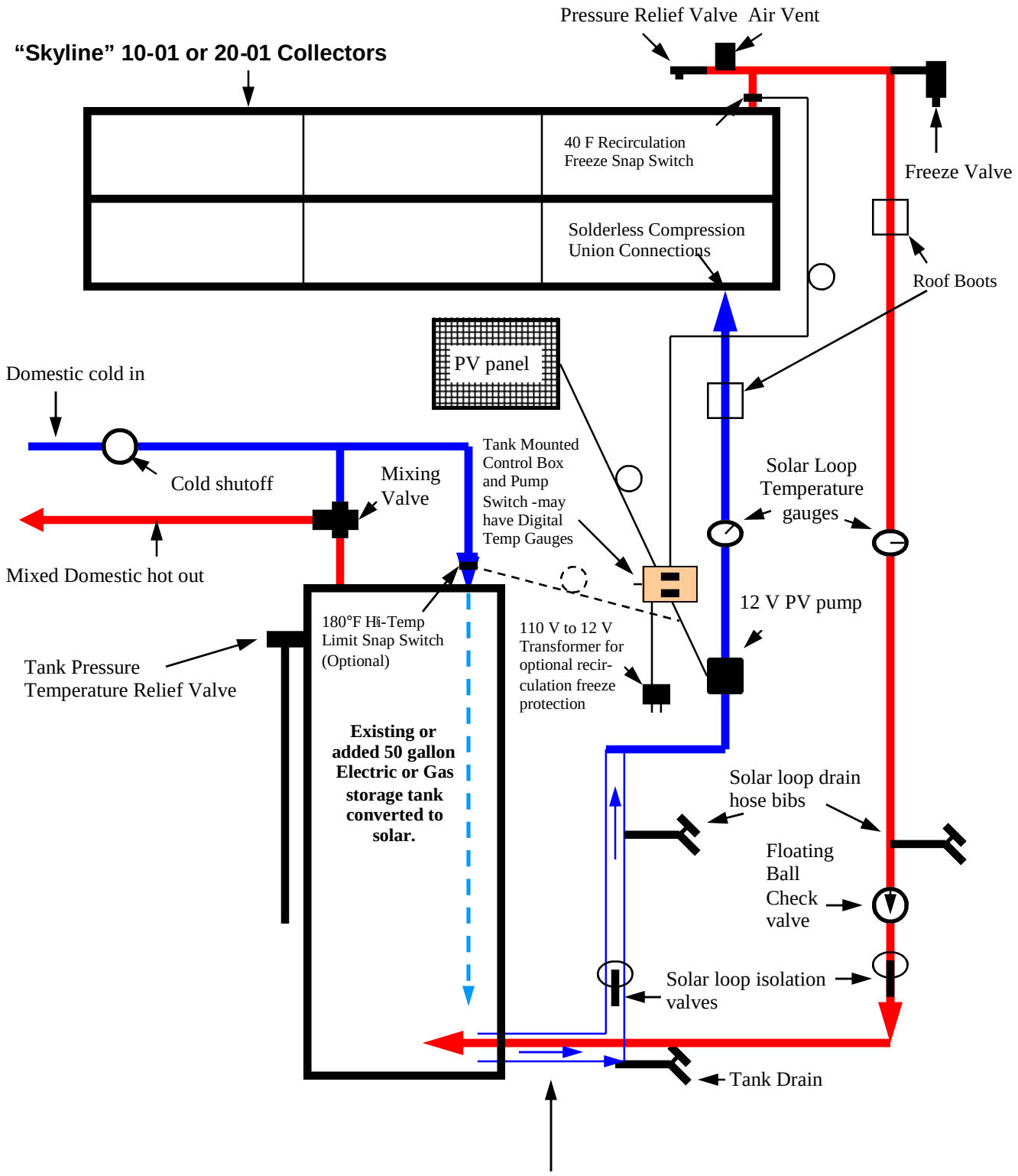

SolarRoofs Tank Bottom "Quick Connect" Coaxial Connection